LINE WAVE 2 CHANDELIER

TECH LIGHTING

PRODUCT FEATURES

- Unsystematic pattern of asymmetric lengths converge as a dramatic chandelier
- Candelabra based bulbs provide soft illumination
- Fully dimmable with most dimmers to create the desired ambiance in your special space
- Aluminum alloy construction for a light, durable structure
- Ideal for both residential and commercial lighting applications
- Protected by a 1-year warranty

Satin Nickel

LAMPING

Includes four 6" stems and six 12" stems. Available with or without lamp. (14) E12 Candelabra base sockets 25w max. LED version includes (14) 2 watt 2306 total delivered lumens 90CRI 2700K LED T6. Dimmable with a low-voltage electronic dimmer. 120v. Cannot be installed on sloped ceiling.

Aged Brass Satin Nickel

ORDERING INFORMATION

700	SYSTEM	LNV	FINISH	LAMP
	LS LINEAR SUSPENSION		**R** AGED BRASS	NO LAMP
			S SATIN NICKEL	**-LED927** T6 LED 90 CRI 2700K 120V (T20/T24)

700 _____ LNV _____ _____

JOB NAME _____

NOTES _____

© 2019 Tech Lighting, L.L.C. All rights reserved. The "Tech Lighting" graphic is a registered trademark of Tech Lighting, L.L.C. Tech Lighting reserves the right to change specifications for product improvements without notification.

7400 Linder Avenue, Skokie, IL 60077
T 847.410.4400 | F 847.410.4500 | techlighting.com

LINE WAVE 2 CHANDELIER

TECH LIGHTING

SPECIFICATIONS

HARDWARE MATERIAL	Metal
SHADE MATERIAL	Steel
NET WEIGHT	9.5 lbs
HEIGHT	15.9in
WIDTH	19.4in
LENGTH	48in
UP LIGHT / DOWN LIGHT / BOTH?	
WET LISTED	
DAMP LISTED	Yes
DRY LISTED	
MIN. HANGING HEIGHT	29.4in
MAX HANGING HEIGHT	65.4in
TOTAL CORD LENGTH	
TOTAL STEM LENGTH	Up to 96in
STEM QTY	10
SLOPED CEILING ADAPTABLE?	No
GENERAL LISTING	ETL Listed
INCLUDES	

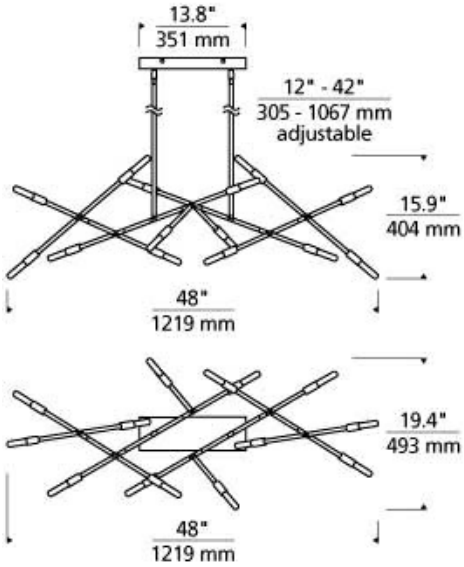

LAMPING SPECIFICATIONS

	LED LAMP	INTEGRATED LED	NON LED	NO LAMP
DELIVERED LUMENS	2240			
WATTS	2			
MAX WATTAGE PER BULB	350W			350W
INPUT VOLTAGE	120V			120V
DIMMING TYPE*	ELV, TRIAC			ELV, TRIAC
CCT	2700K			
CRI	90 CRI			
LED LIFETIME				
L70	25000			
AVERAGE BULB HOURS	25000			
FIELD SERVICEABLE LED				
LAMP BASE	E12 Candelabra Base			E12 Candelabra Base
LAMP SHAPE	T6			T6
LAMP INCLUDED?	Y			N
WARRANTY**	1 Year			1 Year

* Dimming information available at www.techlighting.com/Downloads#dimming
** Visit techlighting.com for specific warranty limitations and details.

T20 / T24 INFORMATION

	Integrated LED	Replacement LED Lamp	No Lamp *
This product can be used to comply with California Building Energy Efficiency Standards 2016 **Title 24** Part 6.		Yes	N/A
This product can be used to comply with California Appliance Efficiency Standards 2016 **Title 20** and may be shipped to and sold in California.		Yes	N/A

* If a light fixture or component does not include a lamp or light source, it is the responsibility of the customer to select a lamp that meets the T24 and T20 requirements.

© 2019 Tech Lighting, L.L.C. All rights reserved. The "Tech Lighting" graphic is a registered trademark of Tech Lighting, L.L.C. Tech Lighting reserves the right to change specifications for product improvements without notification.

7400 Linder Avenue, Skokie, IL 60077
T 847.410.4400 | F 847.410.4500 | techlighting.com